Electro-static Discharge (ESD)

G170Q

Description

Senchip G170Q is a quad forward-conducting buffered p-gate overvoltage protector. It is designed to protect monolithic SLICS(Subscriber Line Interface Circuits) against overvoltage on the telephone line caused by lighting,a.c.power contact and induction. The G170Q parameters are specified to allow equipment compliance with Telcordia GR-1089-CORE Intra-building,ITU-T K.20.k.21 and K.45 and YD/T-950.For low exposure intra-building applications where space is at a premium, a G170Q protector can replace 2×G170D and still meet impulse requirements.

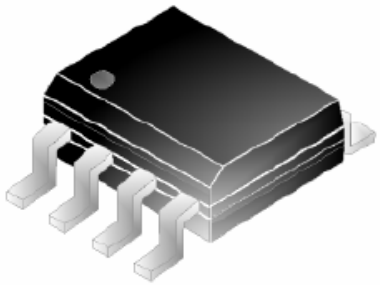

SOP-8

Features

- Quad voltage-programmable protector
- Wide -20V to -155V programming range
- Low 5 mA maximum gate triggering current
- High 100 mA minimum holding current
- Meets industry standards
- RoHS* compliant

Applications

- SLIC card protection VoIP in customer premises,access and central office locations
- FXS ports on EPON,GPON or Xdsl CPE equipment

Benefits

- Smaller PCB area
- Simple layout
- Reduced BOM part count
- Lower manufacturing pick-and-place cost

Functional Block Diagram

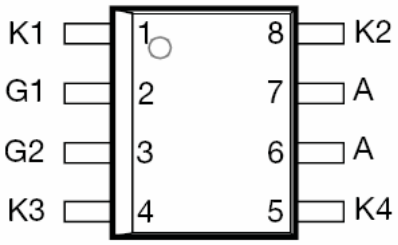

Tel: 0755-82045978 Fax: 0755-82044903-803 http://www.senchip.com

Absolute Maximum Ratings

Rating	Symbol	Value	Units
Repetitive peak off-state voltage,I_G=0 -40℃≤T_J≤85℃	V_{DRM}	-170	V
Repetitive peak gate-cathode voltage,V_{KA}=0 -40℃≤T_J≤85℃	V_{GKRM}	-167	V
Non-repetitive peak on-state pulse current(see Notes 1 and 2) 10/1000 μ s(Bellcore GR-1089-CORE.Issue 1,November 1994,Section 4) 5/350 μ s(ITU-T K.20/21/45,YD/T-950,open circuit voltage waveshape 10/700) 2/40 μ s(IEC61000-4-5,1.2/50 μ s open circuit voltage,2ohm+10ohm,see Note 4) 2/10 μ s(Bellcore GR-1089-CORE,Issue 1,November 1994,Section 4)	I_{TSP}	30 40 85 120	A
Non-repetitive peak on-state current,60 Hz (see Notes 1,2 and 3) 900 s	I_{GSM}	0.5	a
Non-repetitive peak gate current,2/10 μ s pulse,cathodes commoned (see Notes 1 and 2)	I_{GSM}		
Junction temperature	T_J	-40 to 150	
Storage temperature range	Tstg	-40 to +150	

NOTES: 1. Initially the protector must be in thermal equilibrium with T_J = 25 °C. The surge may be repeated after the device returns to its initial conditions.
2. These non-repetitive rated currents are peak values for either polarity. The rated current values may be applied to any cathode-anode terminal pair. Additionally, all cathode-anode terminal pairs may have their rated current values applied simultaneously (in this case the anode terminal current will be four times the rated current value of an individual terminal pair).
3. EIA/JESD51-2 environment and EIA/JESD51-7 high effective thermal conductivity test board (multi-layer) connected with 0.6 mm printed wiring track widths.
4. Combination wave generator as specified in ITU-T K.20, K.21, K.44.

Thermal Information

Parameter		Test Conditions	Min	Typ	Max	Units
$R_{\theta JA}$	Junction to free air thermal resistance	Ptot=0.8W,T_A=25℃ 5 cm^2 ,FR4 PCB			160	℃/W

Tel: 0755-82045978 Fax: 0755-82044903-803 http://www.senchip.com

Electrical Characteristics(T_{op}=25℃)

parameter	Symbol	Test Conditions		Min	Typ	Max	Units
Off-state current	I_D	$V_D=V_{DRM}, V_{GK}=0$				-0.5	V
Breakover voltage	$V_{(BO)}$	10/700 μ s, I_T=-40A,R_S=55 Ω , V_{GG}=100nF		-48		-50	V
Forward voltage	V_F	I_F=5A,t_W=200 μ s				3	V
Peak forward recovery voltage	V_{FRM}	10/700 μ s, I_T=-40A,R_S=55 Ω , V_{GG}=100nF			12		V
Holding current	I_H	I_T=-1A,di/dt=1A/ms,V_{GG}=-100V		-150			mA
Gate reverse current	I_{GAS}	$V_{GG}=V_{GK}=V_{GKRM}, V_{KA}=0$				-5	kV
Gate trigger current	I_{GT}	I_T=3A,tp(g)≥20 μ s, V_{GG}=-100V		0.2		5	pF
Gate trigger voltage	V_{GT}	I_T=3A,tp(g)≥20 μ s, V_{GG}=-100V				2.5	
Anode-cathode off-state capacitance	C_{AK}	f=1MHZ,V_d=1V, I_G=0(see Note 5)	V_D=-3V			100	pF
			V_D=-48V			50	

NOTE: 5. These capacitance measurements employ a three terminal capacitance bridge incorporating a guard circuit. The unmeasured device terminals are a.c. connected to the guard terminal of the bridge.

Parameter Measurement Information

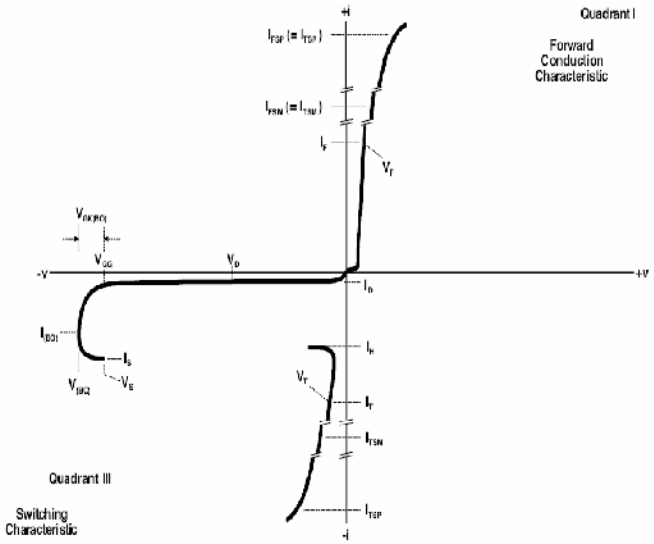

Figure 1. Voltage-Current Characteristic

Tel: 0755-82045978 Fax: 0755-82044903-803 http://www.senchip.com

Typical Applications Circuit

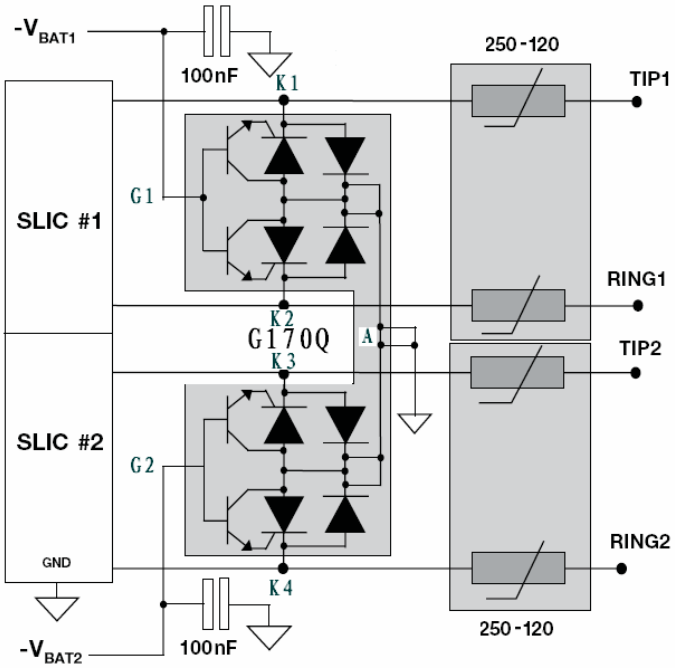

Package Dimensions-Flipchip

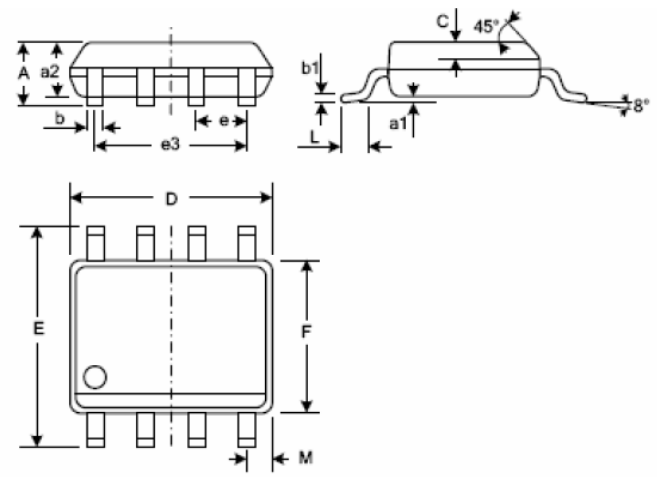

Symbol	SOP-8		
	Millimeters		
	Min	Typ	Max
A			1.75
a1	0.10		0.25
a2			1.65
b	0.35		0.48
b1	0.19		0.25
C		0.50	
D	4.80		5.00
E	5.80		6.20
e		1.27	
e3		3.81	
F	3.80		4.00
L	0.40	0.85	1.27
M			0.6

Tel: 0755-82045978 Fax: 0755-82044903-803 http://www.senchip.com

Part Marking System and Ordering information

Part number	Package	Marking	Min.Order Qty.（PCS）
G170Q	SOP-8	G170Q	2500Tape/Reel

Description of Marking

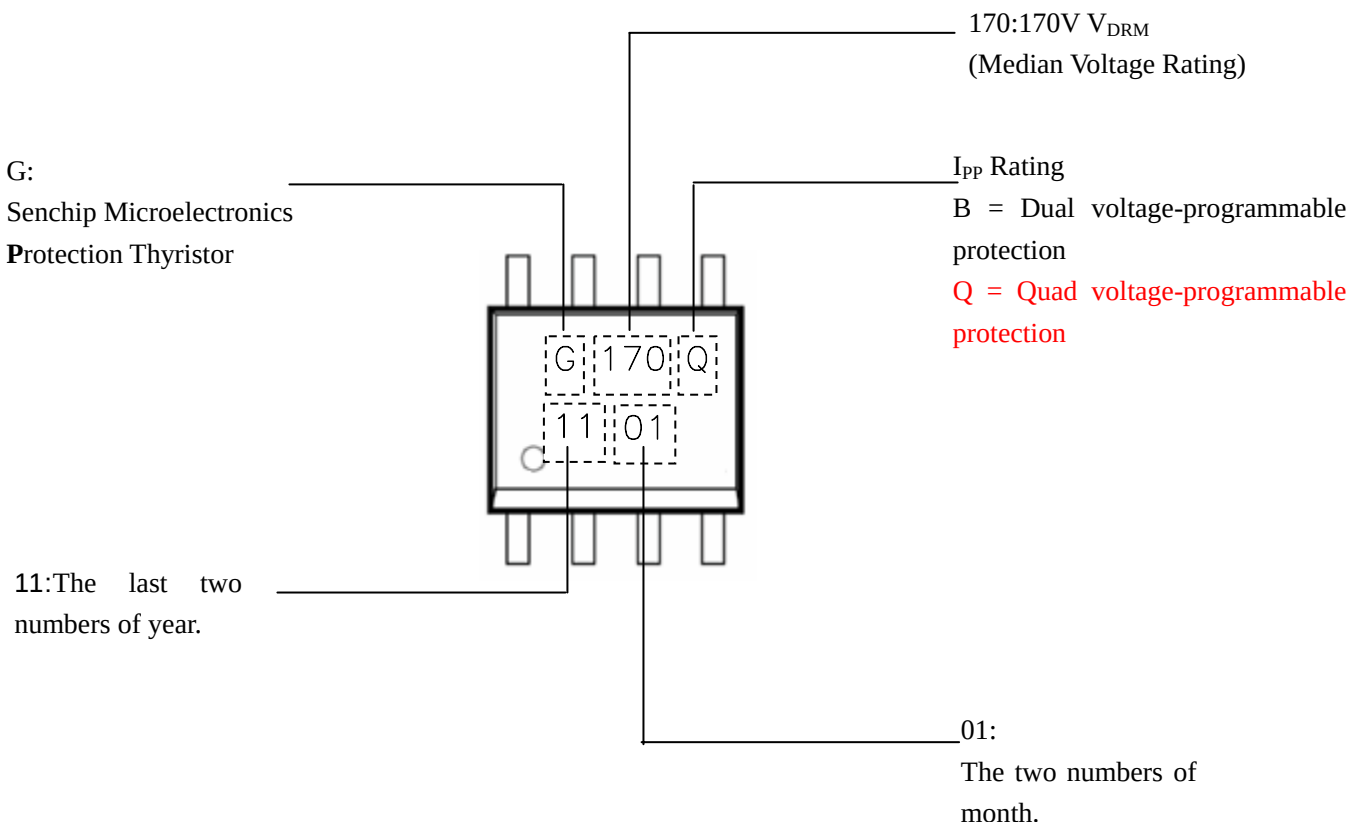

Tel: 0755-82045978 Fax: 0755-82044903-803 http://www.senchip.com