上海晟芯微电子有限公司

Shanghai Senchip Microelectronics Co., Ltd

Transient Voltage Suppressor

SLVU2.8

Features

- 400 Watts peak pulse power(t_P=8/20μs)
- Low capacitance
- Low leakage curren
- Low operating and clamping voltages
- Response Time is < 1 ns
- Solid-state silicon avalanche technology

SOT-23

IEC COMPATIBILITY (EN61000-4)

- IEC 61000-4-2 (ESD) ±15kV (air), ±8kV (contact)
- IEC 61000-4-4 (EFT) 40A (5/50ns)

Mechanical Characteristics

- SOT-23 package
- Molding compound flammability rating: UL 94V-0
- Marking: Marking Code
- Packaging: Tape and Reel
- RoHS/WEEE Compliant

Applications

- Switching Systems
- 10/100/1000 Ethernet
- Wireless data (WAN/LAN) system
- Desktops,Servers and Notebooks
- Base Station
- Analog Inputs

Schematic & PIN Configuration

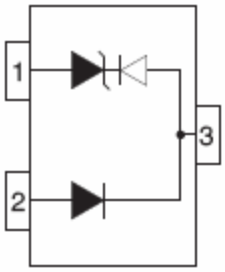

Absolute Maximum Rating

Rating	Symbol	Value	Units
Peak Pulse Power (tp = 8/20μs)	P_{pk}	400	Watts
Peak Pulse Current (tp = 8/20μs)	I_{PP}	24	A
ESD per IEC 61000-4-2 (Air) ESD per IEC 61000-4-2 (Contact)	V_{ESD}	25 15	kV
Lead Soldering Temperature	T_L	260 (10 seconds)	°C
Operating Temperature	T_J	-55 to +125	°C
Storage Temperature	T_{STG}	-55 to +150	°C

Electrical Parameters (T=25℃)

Symbol	Parameter
I_{PP}	Maximum Reverse Peak Pulse Current
V_C	Clamping Voltage @ I_{PP}
V_{RWM}	Working Peak Reverse Voltage
I_R	Maximum Reverse Leakage Current @ V_{RWM}
V_{PT}	Breakdown Voltage @ I_{PT}
I_{PT}	Test Current
V_{BRR}	Maximum Temperature Coefficient of V_{BRR}

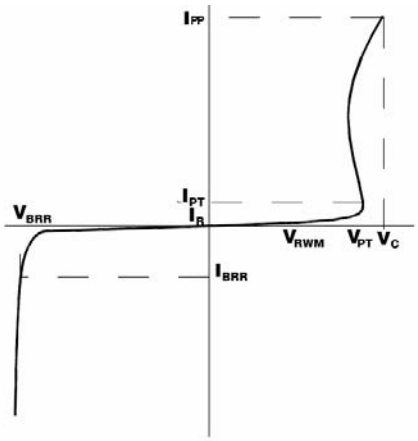

TVS IV Characteristic Curve

Electrical Characteristics

Parameter	Symbol	Conditions	Minimum	Typical	Maximum	Units
Reverse Stand-Off Voltage	V_{RWM}				2.8	V
Punch-Through Voltage	V_{PT}	I_{PT} = 2μA	3.0			V
Snap-Back Voltage	V_{SB}	I_{SB} = 50mA	2.8			V
Reverse Leakage Current	I_R	V_{RWM} = 2.8V, T=25°C			1	μA
Clamping Voltage	V_C	I_{PP} = 2A, t_p = 8/20μs			5.5	V
Clamping Voltage	V_C	I_{PP} = 5A, t_p = 8/20μs			8.5	V
Clamping Voltage	V_C	I_{PP} = 24A, t_p = 8/20μs			15	V
Junction Capacitance	C_j	V_R = 0V, f = 1MHz		5		pF

Typical Applications

Figure 1. Unidirectional Common-Mode Protection

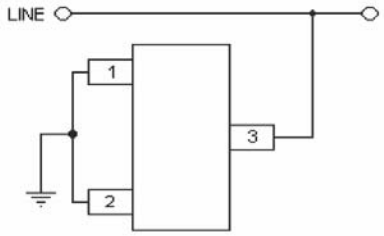

Figure 2. Bidirectional Common-Mode Protection

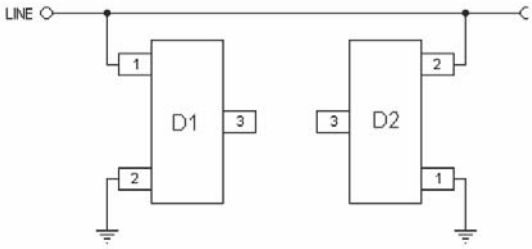

Figure 3. Bidirectional Differential-Mode Protection

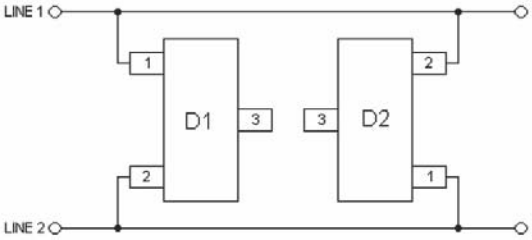

10/100 Ethernet Protection Circuit

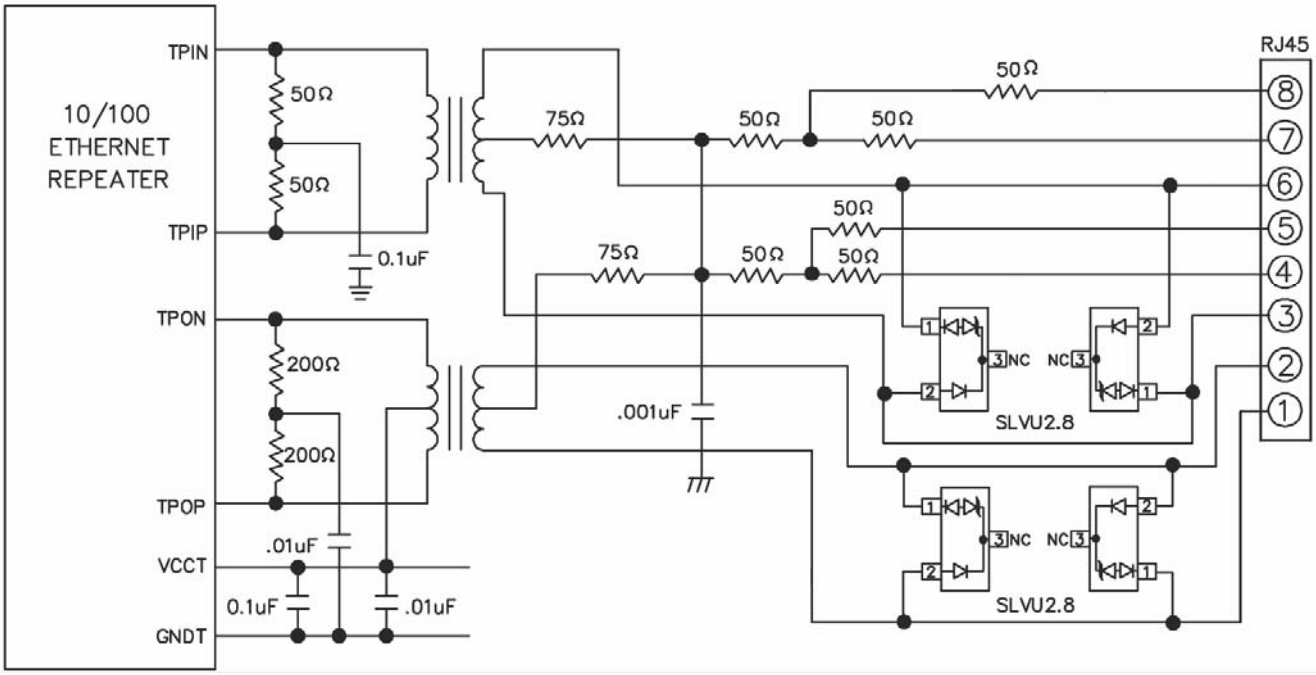

Outline Drawing – SOT-23

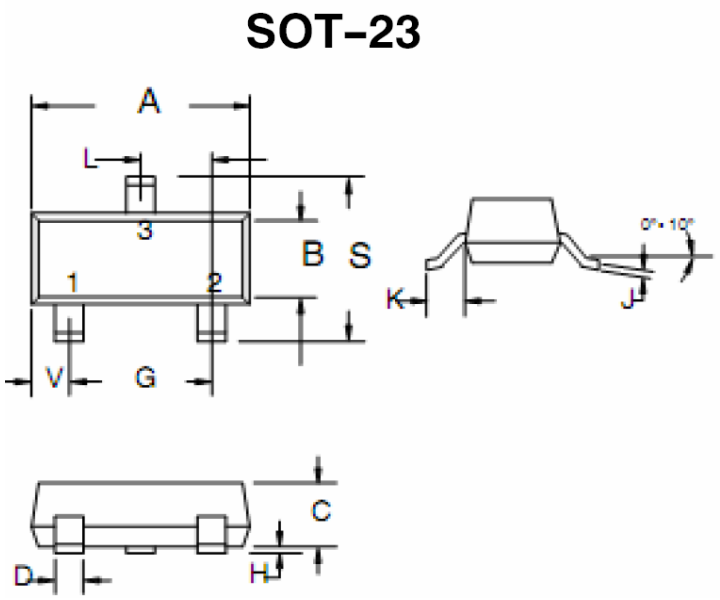

DIM	MILLIMETERS		INCHES	
	MIN	MAX	MIN	MAX
A	2.80	3.04	0.1102	0.1197
B	1.20	1.40	0.0472	0.0551
C	0.89	1.11	0.0350	0.0440
D	0.37	0.50	0.0150	0.0200
G	1.78	2.04	0.0701	0.0807
H	0.013	0.100	0.0005	0.0040
J	0.085	0.177	0.0034	0.0070
K	0.45	0.60	0.0180	0.0236
L	0.89	1.02	0.0350	0.0401
S	2.10	2.50	0.0830	0.0984
V	0.45	0.60	0.0177	0.0236

Ordering Information

Device	Qty per Reel	Reel Size
SLVU2.8	3000	7inch