xDSL CO 雷擊防護

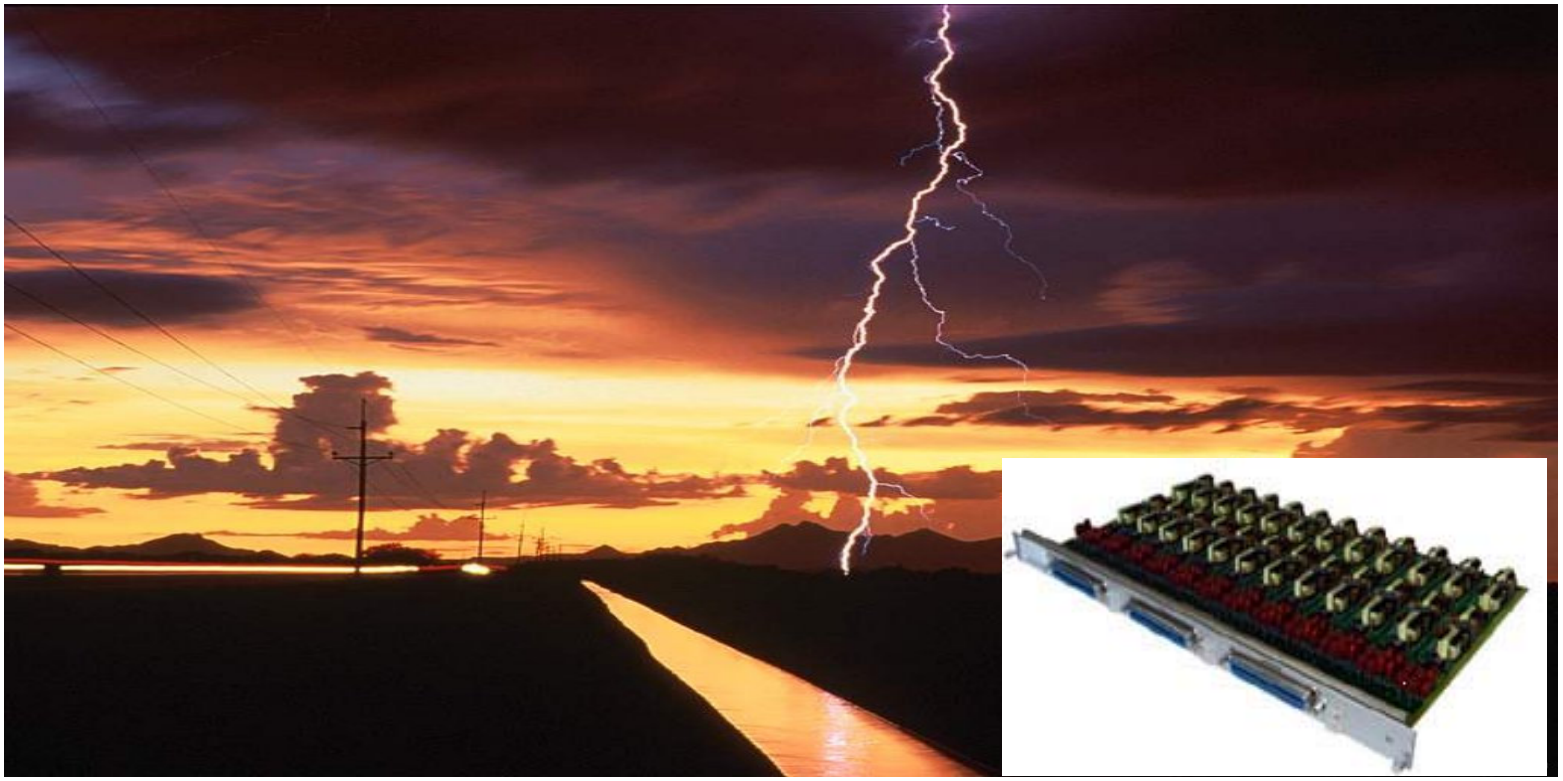

一、应用环境

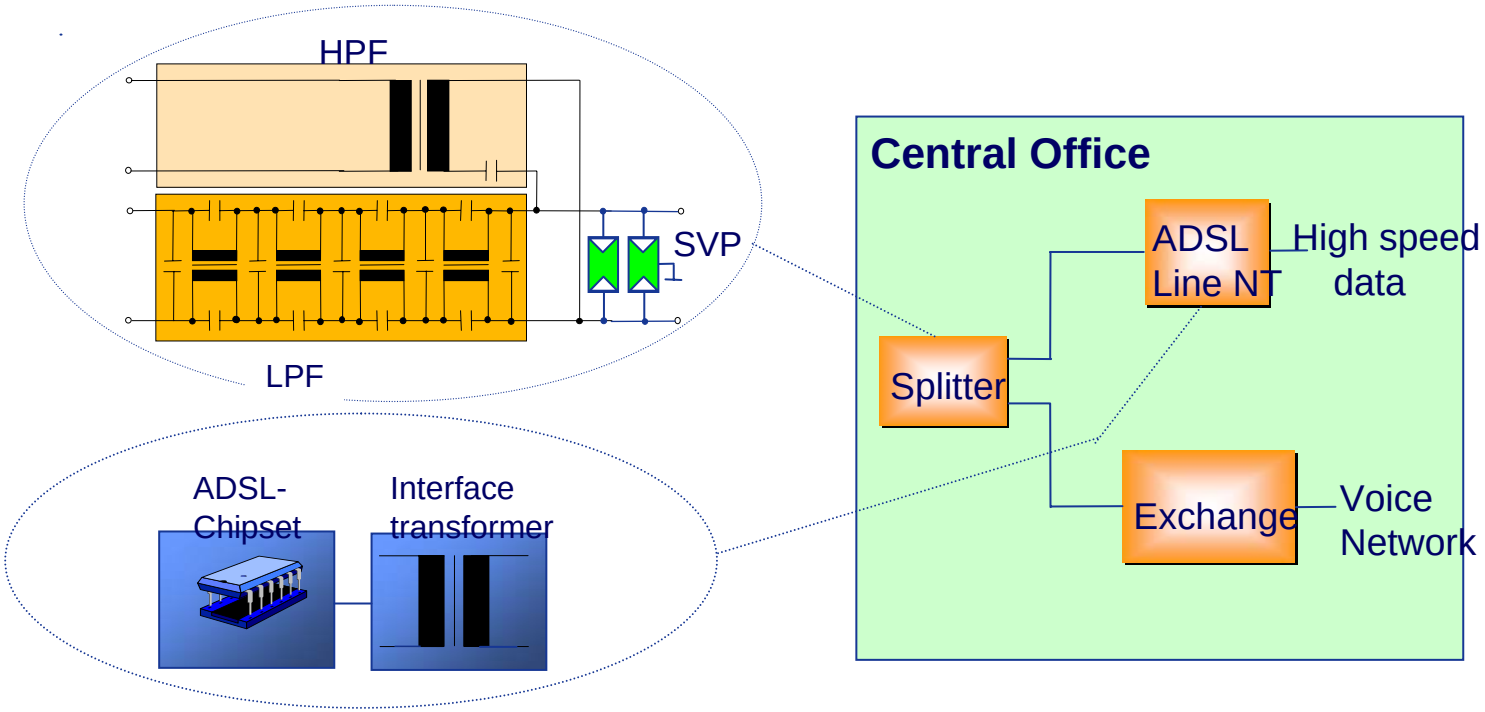
HPF
SVP
LPF
ADSL-
Chipset
Interface
transformer
Central Office
ADSL
Line NT
High speed
data
Splitter
Exchange
Voice
Network

二、應用電路圖

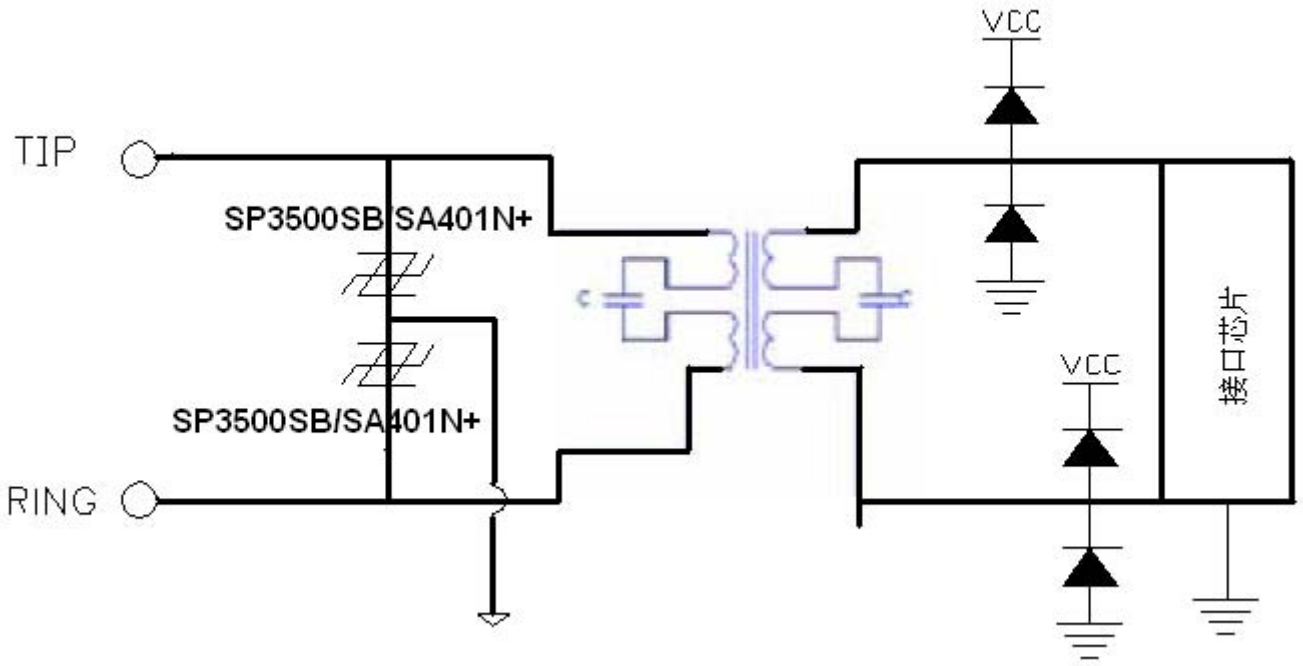

三、雷擊測試標準

In Europe and much of the Far East, the most common standards are ITU-T K.20 and K.21. In North America, most operating companies base their requirements on GR 1089, TIA-968 (formerly known as FCC Part 68), and UL 60950

INTERNATIONAL TELECOMMUNICATION UNION

ITU-T
TELECOMMUNICATION STANDARDIZATION SECTOR OF ITU

K.20
(07/2003)

Table 2a/K.20 – Lightning test conditions for ports connected to external symmetric pair cables

Test No.	Test description	Test circuit and waveshape See figures in Annex A/K.44	Basic test levels Also see clause 7/K.44	Enhanced test levels Also see clauses 5 and 7/K.44	No. of tests	Primary protection	Acceptance criteria	Comments
2.1.1.a	Single port, lightning, inherent, transverse	A.3-1 and A.6.1-1 (a and b) 10/700 µs	$U_{c(max)}$ = 1.0 kV R = 25 Ω	$U_{c(max)}$ = 1.5 kV R = 25 Ω	5 of each polarity	None	A	This test does not apply when the equipment is designed to be always used with primary protection and the operator agrees. If this test does not apply, perform the appropriate test from Table 7.
2.1.1.b	Single port, lightning, inherent, port to earth	A.3-1 and A.6.1-2 10/700 µs	$U_{c(max)}$ = 1.0 kV R = 25 Ω	$U_{c(max)}$ = 1.5 kV R = 25 Ω	5 of each polarity	None	A	

四、xDSL的發展趨勢

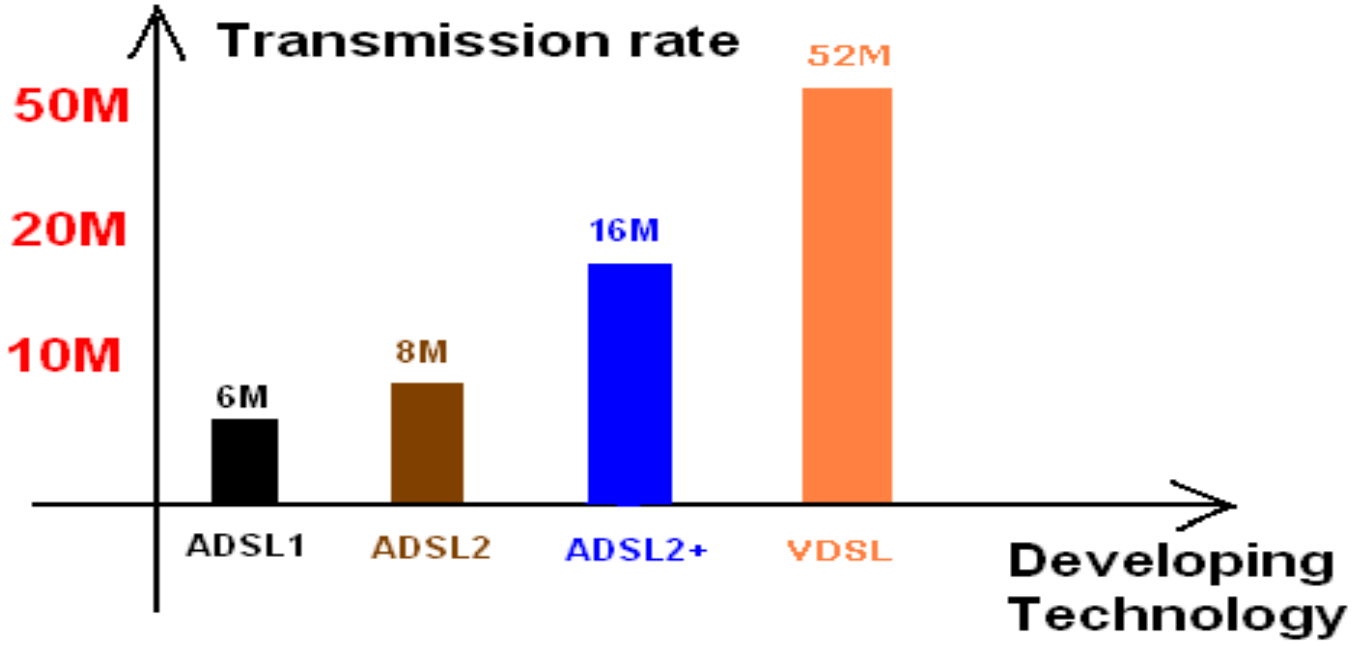
Transmission rate
50M
20M
10M
6M
8M
16M
52M
ADSL1
ADSL2
ADSL2+
VDSL
Developing
Technology

五、結電容與傳輸速率之間的關係

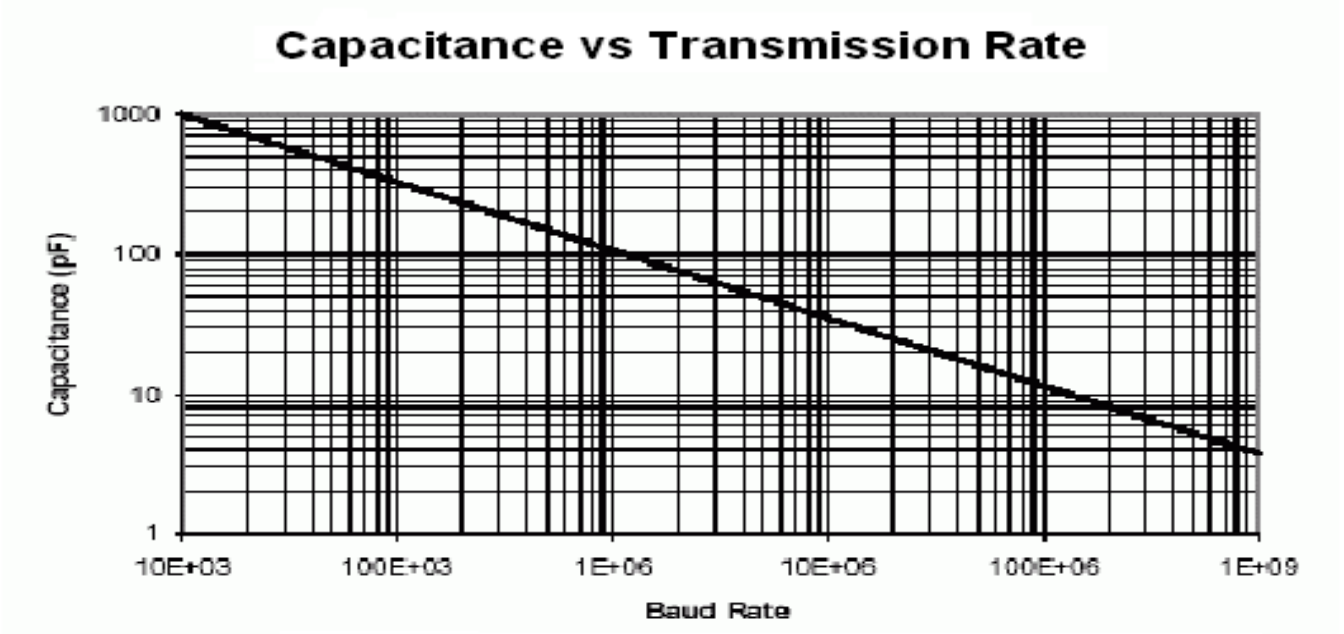

結電容與綫路傳輸比特率對應關係表

六、元器件的選擇

1、半導體放電管(SIDACtor)

特質：響應速度快，一致性好，雷擊殘壓低，結電容<40pF，適用於ADSL1、ADSL2高傳輸速率應用環境。

（1）10/700μS 3KV

SP3100SA（SMB or DO-214AA）

SP3500SA （SMB or DO-214AA）

（2）10/700 μS,4KV

SP3100SB（SMB，DO-214AA）

SP3500SB（SMB，DO-214AA）

（2）10/700 μS,6KV

SP3100SC（SMB，DO-214AA）

SP3500SC（SMB，DO-214AA）

2、陶瓷氣體放電管(Arrester)

特質：雷擊能量大，一致性好，體積小，結電容<1pF

適用於ADSL2+、VDSL超高傳輸速率應用環境。

（1）SA401N+(**4.5mmX3.2mmX2.7mm**)

SMD封装，10/700μS 6KV

8/20μS 1KA